Surge Devices

Technical Product Specification

SDDC...T2

SPD-Type 2

For Photovoltaic systems
(DC SPD "2P combined")



Basic circuit diagram:

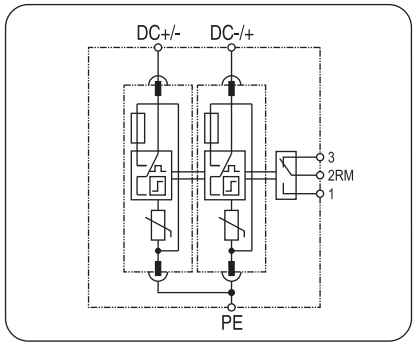

• Technical data

Type		SDDC600T2	SDDC1000T2
SPD according to IEC 61643-11		Type 2	Type 2
DC-PV nominal voltage	U_N	600V DC	1000V DC
Short-circuit current rating (EN 50539-11)	I_{SCPV}	1000A	1000A
Total discharge current (8/20)	I_{total}	40kA	4 0kA
Nominal discharge current (8/20)	I_n	20kA	20kA
Max. discharge current (8/20)	I_{max}	40kA	40kA
Voltage protection level for I_n	U_p	≤ 2.5kV	≤ 4.0kV
Voltage protection level at 5kA	U_p	≤ 2.0kV	≤ 3.5kV
Response time	t_A	≤ 25ns	≤ 25ns
Operating temperature range	T_u	-40°C...+80°C	
Cross-sectionl area		1.5mm² ~ 25mm² solid / 35mm² flexible	
Mounting on		35mm DIN rail	
Enclosure material		Purple (module) / light gray (base) thermoplastic, UL94-V0	
Dimension		2 mods (36mm wide)	
Test standards		IEC 61643-11; and BS EN 61643-11; and IEC 61643-31	
Certification		UKCA, CE, RoHS	
Type of remote signalling contact		Switching contact	
Switching capacity		AC: 250V/0.5A; DC: 250V/0.1A, 125V/0.2A, 75V/0.5A	
Cross-sectional area for remote signalling contact		Max. 1.5mm² solid / flexible	

© Copyright Surge Devices 2025

• Product introduction

1. Summary

SDDC...T2 DC Surge Protector is applied Type 2 SPD in photovoltaic system. The max. PV voltage up to U_{CPV}= 1500V dc, protecting photovoltaic inverter and so on. Designed according to IEC 61643-11; and BS EN 61643-11; and IEC 61643-31; Tested to EN 50539-11.

3. Application

SDDC...T2 DC Surge Protector is applied in solar PV system; installed in dc power supply system. Prevent surge and direct lightning, protecting photovoltaic inverter equipment.

2. Main character

- High discharge capacity, quick response, pluggable
- Consist varistors and thermal disconnection device
- Double thermal disconnection devices providing more reliable protection
- Window will display red when fault occurs, also provide remote alarm terminal at the same time

4. Application environment

- Temperature: -40°C ~ +80°C
- Relative humidity: ≤ 95% (25°C)

• Installation instruction

This surge protective device is usually installed in DC circuit distribution-box, protecting PV system devices in photovoltaic generator circuit.

Fuse must be installed at the upstream of the SPD or the lightning arrester to make sure that the protected system has double protection. The value of the fuse used in a SPD system should be conformed to:

1. The value of FUSE should not be larger than the max. withstand capacity of the SPD's backup fuse value.
2. Under the status of the max. current in the power supply & close loop circuit available current, the fuse should be able to disconnect when overloaded or short-circuited.
3. Take 1 & 2 into consideration, the fuse should be as large as possible to allow the maximum surge discharge of SPD.

• Installation steps

1. Check the product for integrity of the package; make sure the product window indicate green.
2. Mount the SPD on 35 mm DIN rail.
3. Connect conductors, the cross-sectional area of cable must be larger than 6mm². The withstand voltage value of cable is not smaller than AC1060V; ensure wiring reliable.
4. If need remote alarm, it should be connected signal lines to remote signal terminal 1 and 2, or 2 and 3 (When normal 1 and 2 open, 2 and 3 close; when fault, the state is reversed).
5. After above, switch on the power supply and turn on the circuit breaker, if the SPD appeared green window, indicates the unit is operating normally.

Regularly inspect the operating status, especially after lightning. Once the fuse upstream break, or the SPD's window not indicate green, electrician should check/ replace the SPD.

SDDC...T2 installation diagram :

DC SPD-Type 2
Surge protection for use in photovoltaic systems.
Accordance with IEC 60364-7-712:2002-05.
(Installation of photovoltaic power supply systems)

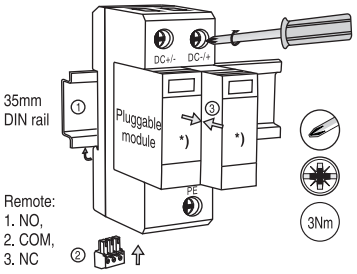

SPD Pluggable module: ***) DC+/- → PE (Purple x 2)**

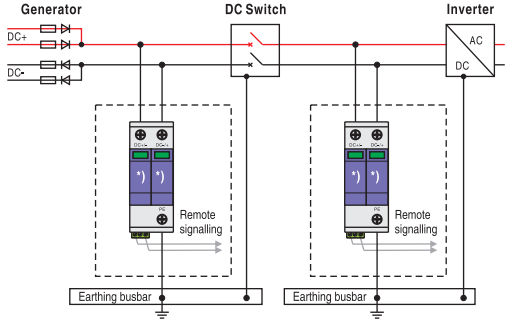

Cross-sectional area	15.5mm	15.5mm	15.5mm
dc+/- , PE min.	1.5mm² (solid/flexible)		
dc+/- , PE max.	25mm² / 35mm² (solid/flexible)		

WARNING:

1. **The device must be installed by electrically skilled person, conforming to national standards and safety regulations.**
2. **It is recommended that installation should be done under power off condition.**