Surge Devices

Technical Product Specification

SDT1232P50

SPD-Type 1+2+3

For TT/TN systems
("1+1" circuit)



Basic circuit diagram:

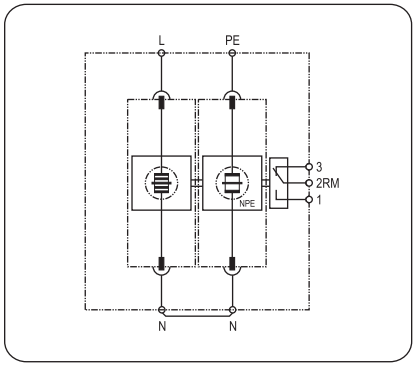

• Technical data

Type		SDT1232P50
SPD according to IEC 61643-11		Type 1+2+3
Nominal a.c. voltage (50/60Hz)	U_N	230V~
Total lightning impulse current (10/350)	I_{imp}	50kA
Max. continuous operating a.c. voltage	U_C	255V~
Lightning impulse current (10/350)	I_{imp}	25kA (L-N), 50kA (N-PE)
Nominal discharge current (8/20)	I_n	50kA (L-N), 50kA (N-PE)
Max. discharge current (8/20)	I_{max}	75kA (L-N), 75kA (N-PE)
Voltage protection level	U_p	≤ 1.5kV (L-N), ≤ 1.5kV (N-PE)
Follow curent extinguishing capability at U_C	I_f	32A fuse will not be triggered at 2kA$_{rms}$
Response time	t_A	≤ 100ns
Max. back up fuse (L)		200A gL/gG
Max. back up fuse (L-L')		125A gL/gG
TOV voltage	U_T	440V/120min (L-N), 1200V/200ms (N-PE)
Operating temperature range	T_U	-40°C...+80°C
Max. cross-sectional area		10mm^2~35mm^2 solid / 50mm^2 flexible
Mounting on		35mm DIN rail
Enclosure material		Purple (module) / light gray (base) thermoplastic, UL94-V0
Dimension		4 mods (72mm wide)
Test standards		IEC 61643-11; and BS EN61643-11
Certification		UKCA, CE, RoHS
Type of remote signalling contact		Switching contact
Switching capacity	U_N/I_N	AC: 250V/0.5A, DC: 250V/0.1A; 125V/0.2A; 75V/0.5A
Cross-sectional area for remote signalling contact		Max.1.5mm^2 solid/flexible

© Copyright Surge Devices 2025

• Product introduction

1. Summary

SDT1232P50 is for installation at LPZ 0$_A$-1 or higher, protecting low voltage equipment against lightning and surge damages. Specially designed for TT/TN system ("1+1"circuit). Applied in SPD type I+II+III for installation in single-phase power supply system of lightning current surge protection. Designed according to IEC 61643-11; and BS EN61643-11.

2. Main character

- Single-phase protection for TT/TN system("1+1"circuit)
- Adopted hermetical GDT technology, high follow current extinguishing capability
- Extremely low voltage protection level , pluggable
- Double thermal disconnection devices, provide more reliable protection
- Multifunctional connection for conductors and busbars
- Green window will change when fault occurs, also provide remote alarm terminal at the same time

3. Application

SDT1232P50 is mainly for installing in indoor main power distribution-box to discharge direct lightning current.

4. Application environment

- Temperature: -40°C ~ +80°C
- Relative humidity: ≤ 95% (25°C)

• Installation instruction

According to lightning protection zones concept, for installation at LPZ 0$_A$-1 or higher. It is usually installed in floor distribution-box or Class I main distribution-box

Fuse must be installed at the upstream of the SPD or the lightning arrester to make sure that the protected system has double protection. The value of the fuse used in a SPD system should be conformed to:

1. The value of FUSE should not be larger than the max. withstand capacity of the SPD's backup fuse value.
2. Under the status of the max. current in the power supply & close loop circuit available current, the fuse should be able to disconnect when overloaded or short-circuited.
3. Take 1 & 2 into consideration, the fuse should be as large as possible to allow the maximum surge discharge of SPD.

• Installation steps

1. Check the product for integrity of the package; make sure the product window indicates green.
2. Mount the SPD on 35 mm DIN rail.
3. Connect conductors, the cross-sectional area of cable must be larger than 10mm^2. The withstand voltage value of cable is not smaller than AC500V; ensure wiring reliable.
4. If need remote alarm, it should be connected signal lines to remote signal terminal 1 and 2, or 2 and 3 (When normal, 1 and 2 open, 2 and 3 close; when fault, the state is reversed).
5. After above, switch on the power supply and turn on the circuit breaker, if the SPD's window does not appear red, this indicates the unit is operating normally.

Regularly inspect the operating status, especially after lightning. Once the fuse upstream breaks, or the SPD's window indicates red, electrician should check/replace the SPD.

SDT1232P50 installation diagram:

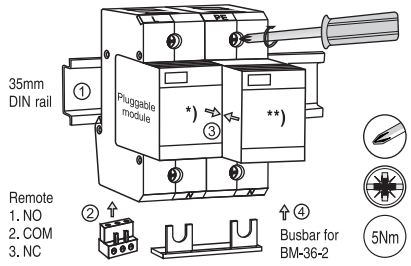

SPD Pluggable module: ***) L-N (Purple x 1); ****) N-PE (Gray x 1)**

cross-sectional area	15.5mm	15.5mm 15.5mm	F1 → F2
L/N/PE min.	10mm^2		
L/N/PE max.	25-35mm^2	50mm^2	F1 (>200A gL/gG) → F2 (≤200A gL/gG)
⚠	busbar 16mm^2	15mm	F1 (≤125A gL/gG) → F2 < F1

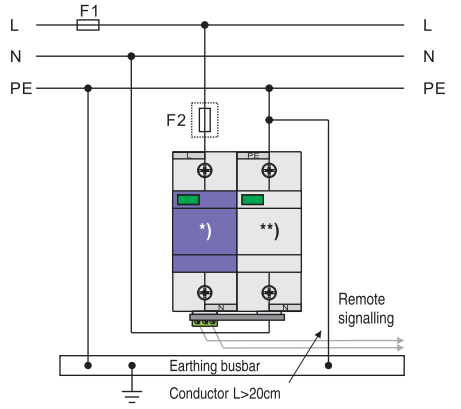

WARNING:

1. **The device must be installed by electrically skilled person, conforming to national standards and safety regulations.**
2. **It is recommended that installation should be done under power off condition.**