Surge Devices

Technical Product Specification

SDT1234P

SPD-Type 1+2+3

For TT/TN-S systems
(“3+1" circuit)



Basic circuit diagram:

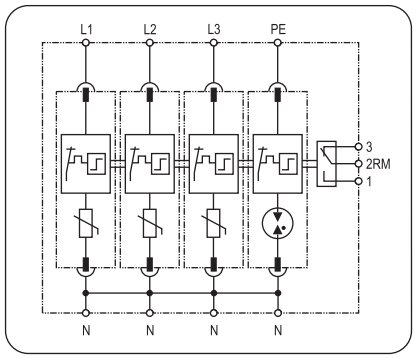

• Technical data

Type		**SD1234P**
SPD according to IEC 61643-11		Type 1+2+3
Nominal a.c. voltage (50/60Hz)	U_N	230V / 400V~
Total lightning impulse current (10/350μs)	I_{total}	50kA
Rated voltage (max. continuous a.c. voltage)	U_C	275V~ [L-N] ; 255V~ [N-PE]
Lightning impulse current (10/350μs)	I_{imp}	12.5kA [L-N]; 37.5kA [N-PE]
Nominal discharge current (8/20μs)	I_n	30kA [L-N]; 50kA [N-PE]
Max. discharge current (8/20μs)	I_{max}	65kA [L-N]; 100kA [N-PE]
Voltage protection level	U_p	≤ 1.5kV [L-N]; ≤ 1.5kV [N-PE]
TOV voltage	U_T	335V/5sec [L-N]; 1200V/200ms [N-PE]
Response time	t_A	≤ 25ns [L-N]; ≤ 100ns [N-PE]
Max. back up fuse		160A gL/gG
Operating temperature range	T_U	-40°C...+80°C
Cross-sectional area		1.5mm²~25mm² solid / 35mm² flexible
Mounting on		35mm DIN rail
Enclosure material		Purple (module) / light gray (base) thermoplastic, UL94-V0
Dimension		4 mods (72mm wide)
Test standards		IEC 61643-11; and BS EN61643-11
Certification		UKCA, CE, RoHS
Type of remote signalling contact		Switching contact
Switching capacity	U_N/I_N	AC:250V/0.5A DC:250V/0.1A,125V/0.2A,75V/0.5A
Cross-sectional area for remote signalling contact		Max. 1.5mm² solid / flexible

© Copyright Surge Devices 2025

• Product introduction

1. Summary

SDT1234P is for installation at LPZ 0_A-2 or higher. Protecting low voltage devices from surge damages. Specially designed for TT/TN-S system ("3+1" circuit). Applied in SPD type 1+2+3 for three-phase power supply system of lightning current surge protection. Designed according to IEC 61643-11; and BS EN61643-11.

3. Application

SDT1234P is mainly for installing indoor main power distribution-box to discharge direct lightning current.

2. Main character

- Three-phase protection for TT/TN-S system ("3+1" circuit)
- High discharge capacity, quick response, pluggable
- Double thermal disconnection devices, providing more reliable protection
- Multifunctional connection for conductors and busbars
- Green window will change to red when fault and also provide remote alarm control at the same time

4. Application environment

- Temperature: -40°C ~ +80°C
- Relative humidity: ≤ 95% (25°C)

• Installation instruction

According to lightning protection zones concept, for installation at LPZ 0_A-2 or higher. This surge protective device is usually installed in distribution-box or feeder bus of UPS, protecting devices or equipment downstream.

Fuse must be installed at the upstream of the SPD or the lightning arrester to make sure that the protected system has double protection. The value of the fuse used in a SPD system should be conformed to:

1. The value of FUSE should not be larger than the max. withstand capacity of the SPD's backup fuse value.
2. Under the status of the max. current in the power supply & close loop circuit available current, the fuse should be able to disconnect when overloaded or short-circuited.
3. Take 1 & 2 into consideration, the fuse should be as large as possible to allow the maximum surge discharge of SPD.

• Installation steps

1. Check the product for integrity of the package; make sure the product window indicate green.
2. Mount the SPD on the 35mm DIN rail.
3. Connect conductors, the cross-sectional area of cable must be larger than 6mm². The withstand voltage value of cable is not smaller than AC500V; ensure wiring reliable.
4. If need remote alarm, it should be connected signal lines to remote signal terminal 1 and 2, or 2 and 3 (When normal, 1 and 2 open, 2 and 3 close; when fault, the state is reversed).
5. After above, switch on the power supply and turn on the circuit breaker, if the SPD's window indicates green, this indicates the unit is operating normally.

Regularly inspect the operating status, especially after lightning. Once the fuse upstream breaks, or the SPD's window indicates red, electrician should check/replace the SPD.

SDT1234P installation diagram:

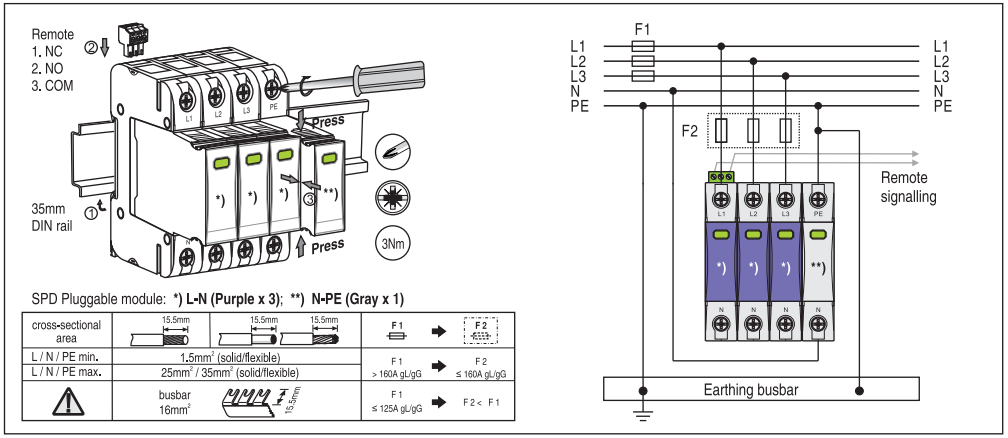

WARNING:

1. **The device must be installed by electrically skilled person, conforming to national standards and safety regulations.**
2. **It is recommended that installation should be done under power off condition.**