SDT1232P installation diagram:

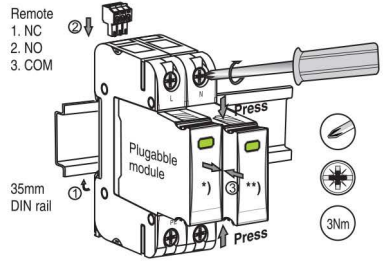

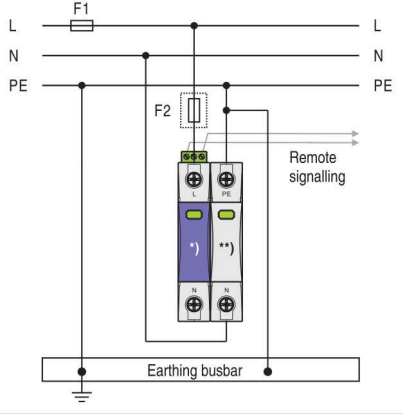

SPD Pluggable module: ***) L-N (Purple x 1); **) N-PE (Gray x 1)**

cross-sectional area	15.5mm / 15.5mm / 15.5mm	F1 ➡ F2
L / N / PE min.	1.5mm² (solid/flexible)	F1 ➡ F2
L / N / PE max.	25mm² / 35mm² (solid/flexible)	> 160A gL/gG ➡ ≤ 160A gL/gG
⚠	busbar 16mm² 15.5mm	F1 ➡ F2 < F1
		≤ 125A gL/gG

WARNING:

1. **The device must be installed by electrically skilled person, conforming to national standards and safety regulations.**
2. **It is recommended that installation should be done under power off condition.**