SDT23C4P installation diagram:

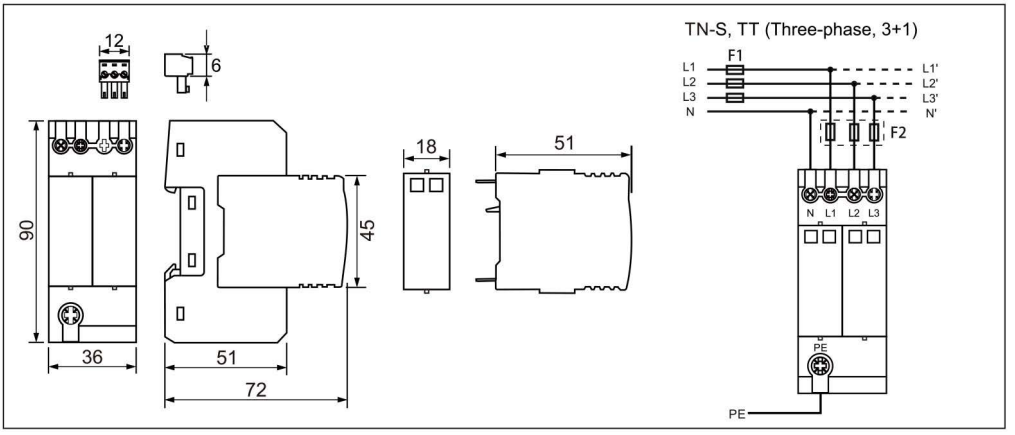

WARNING:

1. The device must be installed by electrically skilled person, conforming to national standards and safety regulations.
2. It is recommended that installation should be done under power off condition.